Imaginex International Journal of Interdisciplinary Research and Reviews (IIJIRR)
Volume 1, Issue 3, November – December 2026
ISSN: 3140-0094 (Online)
www.iijirr.com

StepVolt: Design and Model-Based Energy Assessment of a Mechanically Protected Piezoelectric Floor Tile for Footstep Energy Harvesting

Ramesh Palanisamy[1,*], Alreem Said Almasroori[1], Al Jaziy Faiz Al-Rashdi[1], Sheikha Khamis Al-Senaidi[1], Aljalila Raised Alabd Almalkia[1], Aryam Nasser Said Aljabri[1], Inas Ali Said Alawisi[1]

[1]Department of Computing and Information Sciences, College of Computing and Information Sciences, University of Technology and Applied Sciences – Ibra, Sultanate of Oman
[*]Corresponding author. E-mail address: ramesh.palanisamy@utas.edu.om

Abstract

Researchers usually assess small piezoelectric floor tiles by the peak voltage they produce, a figure that says little about how much energy can actually be stored and used. This paper presents StepVolt, a 30 × 30 cm floor tile designed to make that energy measurable. Six lead zirconate titanate (PZT) discs sit beneath a top plate whose movement is limited by rigid stops, intended to let the brittle discs bend without cracking. Each disc has its own bridge rectifier, and the combined output charges a storage capacitor protected by a 12 V Zener diode. A microcontroller with its own USB supply records the capacitor voltage, so the measuring circuit does not consume the harvested energy. The tile is designed in three prototype stages, from a single-disc bench version to a fully instrumented tile. A charge-balance model, described by just two measurable quantities — the voltage at which charging levels off and the rate at which it approaches that level — predicts that a 60 kg person would store about 0.51 mJ in 100 steps, that a single step converts at most 18.8 % of the available electrical energy, and that output stops rising above roughly 85 kg once the stops engage. A Monte Carlo analysis shows that two simple calibration steps narrow the uncertainty of the energy measurement from about −20/+29 % to ±1.9 %. These results are model predictions, and a factorial test plan is defined to verify them experimentally.

Keywords: Piezoelectric energy harvesting, Footstep energy, Smart flooring, Prototype development, Energy storage, Measurement uncertainty

1. Introduction

Energy harvesting turns small amounts of otherwise wasted energy — light, heat, vibration or human movement — into electricity for low-power devices such as indicator lights and the wireless sensors that underpin Internet of Things (IoT) services in smart cities [11], [17]. Walking is a particularly attractive source in busy indoor spaces, because every step presses on the floor and releases mechanical work. Piezoelectric ceramics such as lead zirconate titanate (PZT) generate an electric charge when they are bent or compressed, which makes them a natural choice for converting part of that work into electrical pulses [9], [11].

Footstep harvesting has already moved beyond the laboratory. Commercial tiles based on electromagnetic generators report around 3 J per step [13] and have been installed at exhibition venues in the Gulf region, such as Expo Dubai [6]. Piezoelectric research prototypes, by contrast, usually produce power in the microwatt to milliwatt range [9], [16]. At this smaller scale, three practical difficulties appear repeatedly. Ceramic discs are brittle and can crack when they carry an adult's full weight [1], [9]. The pulses they produce are brief, alternating and weak in current, so they must be rectified and stored before they can do useful work [5], [7]. Most importantly, many prototypes are judged only by their peak voltage [2], [8]. That figure does not reveal how much energy is stored, cannot separate the influence of body weight from that of the number of steps, and becomes misleading when the measuring electronics draw their power from the harvester itself.

This study responds to all three difficulties. Its main contributions are:

(i) a floor tile in which mechanical stops protect six PZT discs, each disc is rectified separately and the monitoring electronics are powered independently, designed in three prototype stages (Section 3);

(ii) a simple charge-balance model that describes the tile with two measurable quantities and predicts the stored energy, the most efficient operating voltage and the body weight above which output no longer increases (Section 4);

(iii) a factorial test plan with acceptance criteria fixed in advance (Section 5); and

(iv) an uncertainty budget showing how two low-cost calibration steps make the energy measurements reliable (Section 7).

Figure 1 summarises the overall research workflow.

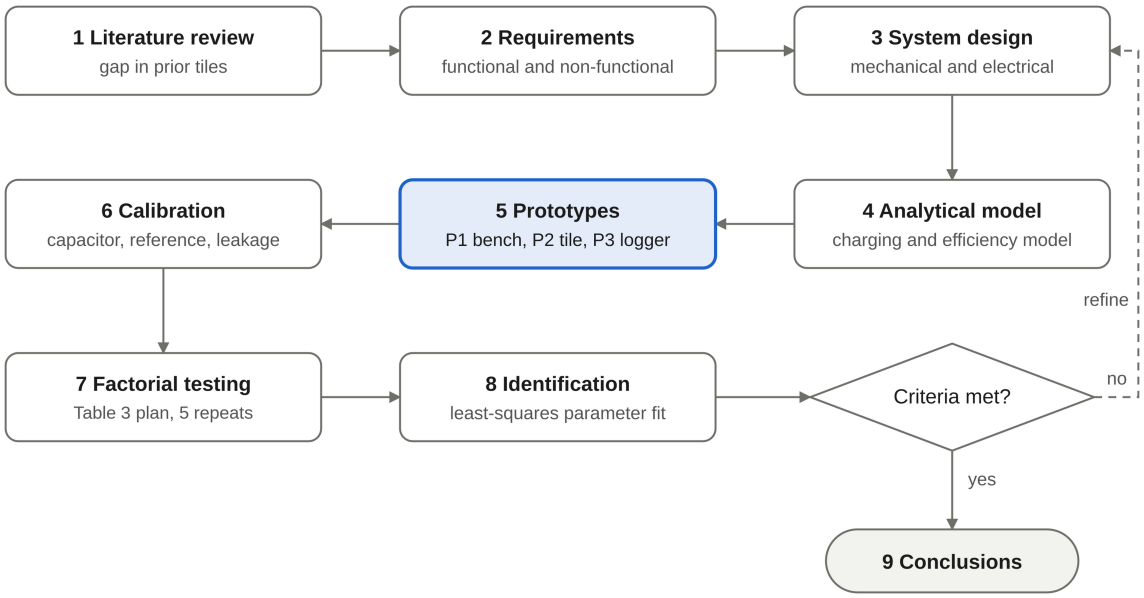

Figure 1. Research workflow. Steps 6–8 form the planned validation campaign; if the validation criteria are not met, the work returns to the design and modelling stages.

2. Related work

Reviews of smart flooring identify piezoelectric materials as the most suitable option for thin, compact tiles [4], [17], while experimental studies show that output depends on the number of elements, their electromechanical coupling, the applied load and the way the elements are wired together [2]. Commercial electromagnetic tiles go further and record each step as data for footfall analysis [6], [13].

Among piezoelectric prototypes, Hwang et al. reached 770 µW (RMS) in a steel-ball drop test by transmitting the force through springs and a tip mass and tuning both the mechanical resonance and the electrical load [9]. Thanach-Issarasak et al. collected 450.26 mJ from 30 pedestrians over ten minutes at a building entrance [16], and Go et al. found that changing the top-plate material from wood or porcelain to ceramic raised the mean voltage from about 0.70 V to 1.02 V [8]. Abd Manaf and Kok needed around 22 h to charge a 12 V battery through a boost converter and used wire springs as dampers to keep the discs from cracking [1]. On the electrical side, the simple bridge-and-capacitor circuit remains the most practical self-powered option [5], although leakage in the storage capacitor reduces the energy that can be used [7]. Each of these features has also been reported on its own. Isarakorn et al. used a mechanical stopper to protect a plucked piezoelectric cantilever [10], and Pham et al. added a protective spring that kept a piezoelectric tile working after 1000 load cycles [14]. Yingyong et al. measured the energy harvested from real pedestrians and found that body weight and walking pace strongly affect it, with heavier walkers giving roughly three times as much energy as lighter ones [19]. Cascetta et al. derived an analytical model of the energy that a bridge rectifier extracts from a piezoelectric tile under footstep-like pulses and confirmed it on a commercial tile [3]. As Table 1 shows, none of the low-cost tiles reviewed combines mechanical protection, an energy-based performance measure, independent monitoring and a predictive model.

Table 1. Comparison of related work (✓ addressed; – not reported).

Study	Principal result	Over-travel protection	Stored-energy measure	Independent monitoring	Predictive model
Commercial tile [6], [13]	about 3 J per step	✓	✓	–	–
Hwang et al. [9]	770 µW RMS	✓	–	–	✓
Thanach-Issarasak et al. [16]	450.26 mJ in 10 min	–	✓	–	–
Go et al. [8]	0.70–1.02 V mean	–	–	–	–
Abd Manaf and Kok [1]	22 h to charge a 12 V battery	✓	–	–	–
Saifudin and A Bakar [15]	LED illumination	–	–	–	–
This work	**Model and test protocol**	✓	✓	✓	✓

3. System design and prototypes

3.1. Architecture

StepVolt is organised around two separate paths that share only a common ground (Figure 2). The energy path is powered entirely by footsteps and carries charge from the discs to the storage capacitor and, when required, to an LED. The monitoring path has its own 5 V USB supply and observes the capacitor through a high-resistance voltage divider that draws less than 1 µA. Keeping the two paths apart means that the act of measuring does not drain the energy being measured.

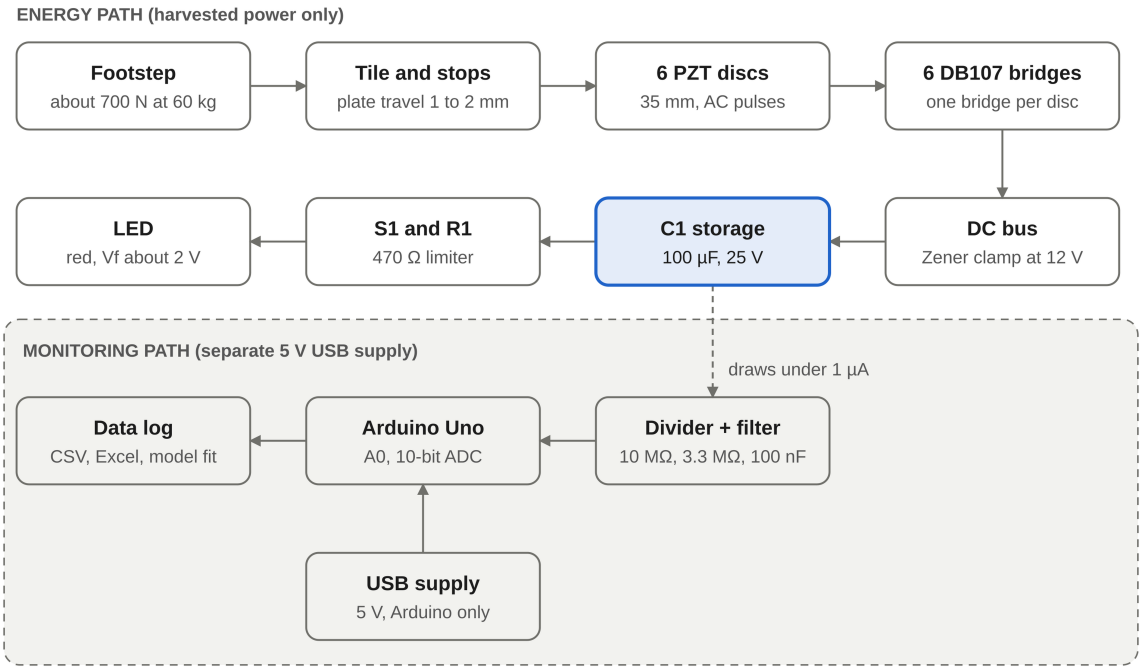

Figure 2. System architecture. The dashed connection is the only link between the harvesting circuit and the monitoring electronics.

3.2. Mechanical design

The tile is built as a stack of five layers (Figure 3): a 30 × 30 cm top plate, six contact pads, six 35 mm PZT discs resting on ring-shaped supports, a frame of rubber spacers and rigid stops, and a medium-density fibreboard (MDF) base. When a person steps on the tile, each pad presses on the centre of a disc and bends it. The rigid stops limit the downward travel of the plate to 1–2 mm, chosen to strain the discs without cracking them [1], [12] (Figure 4); the safe deflection for the discs used has still to be confirmed by bench tests.

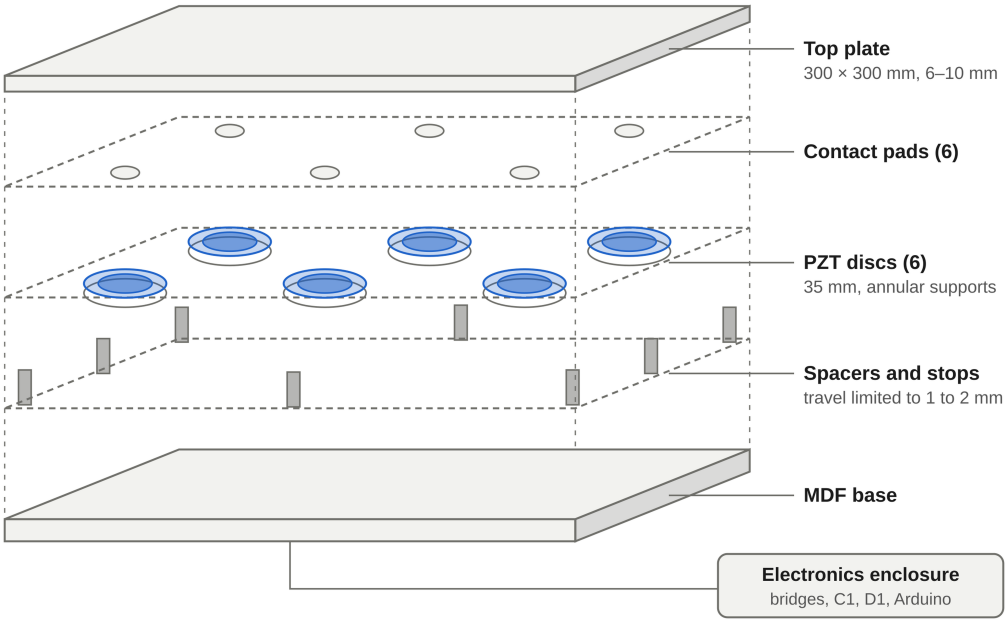

Figure 3. Exploded assembly view of the StepVolt tile and its electronics enclosure.

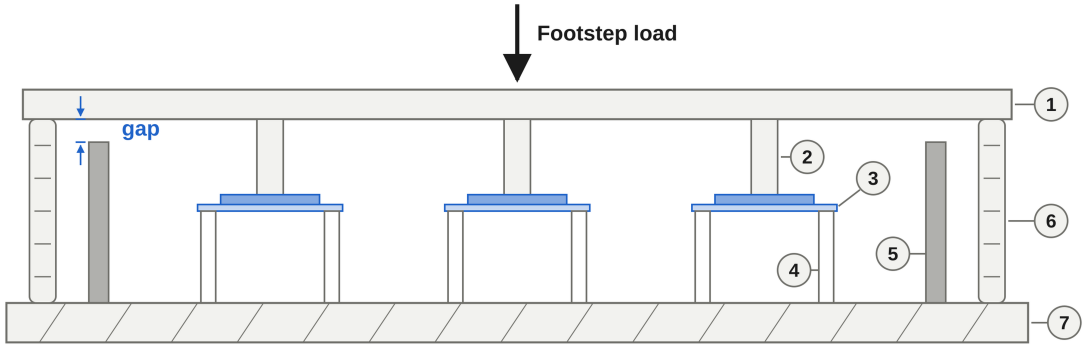

1 Top plate, plywood or acrylic, 6 to 10 mm
2 Contact pad, transmits load to disc centre
3 PZT disc on brass shim, 35 mm (x6)
4 Annular support
5 Rigid travel stop
6 Elastomeric spacer (return spring)
7 MDF base
Gap between plate and stop, 1 to 2 mm

Figure 4. Cross-section of the tile (not to scale). The small gap between the plate and each stop sets the maximum disc deflection.

3.3. Electrical and monitoring design

Each disc is connected to its own DB107 bridge rectifier, and the six rectified outputs are joined on a common DC line. Because each disc is rectified separately, a disc that is being released cannot cancel the charge produced by one that is being pressed. A 1N4742A Zener diode keeps the line below 12 V, well within the 25 V rating of the 100 µF storage capacitor C1 (Figure 5). Switch S1 discharges C1 through a 470 Ω resistor into a red LED to demonstrate the stored energy, and push-button S2 empties the capacitor before each test.

A 10 MΩ and 3.3 MΩ voltage divider, smoothed by a 100 nF capacitor, scales the capacitor voltage into the input range of an Arduino Uno, which records ten readings per second. The firmware logic is shown in Figure 6: a main loop samples, converts and records the voltage, while an independent interrupt routine counts footsteps from a microswitch.

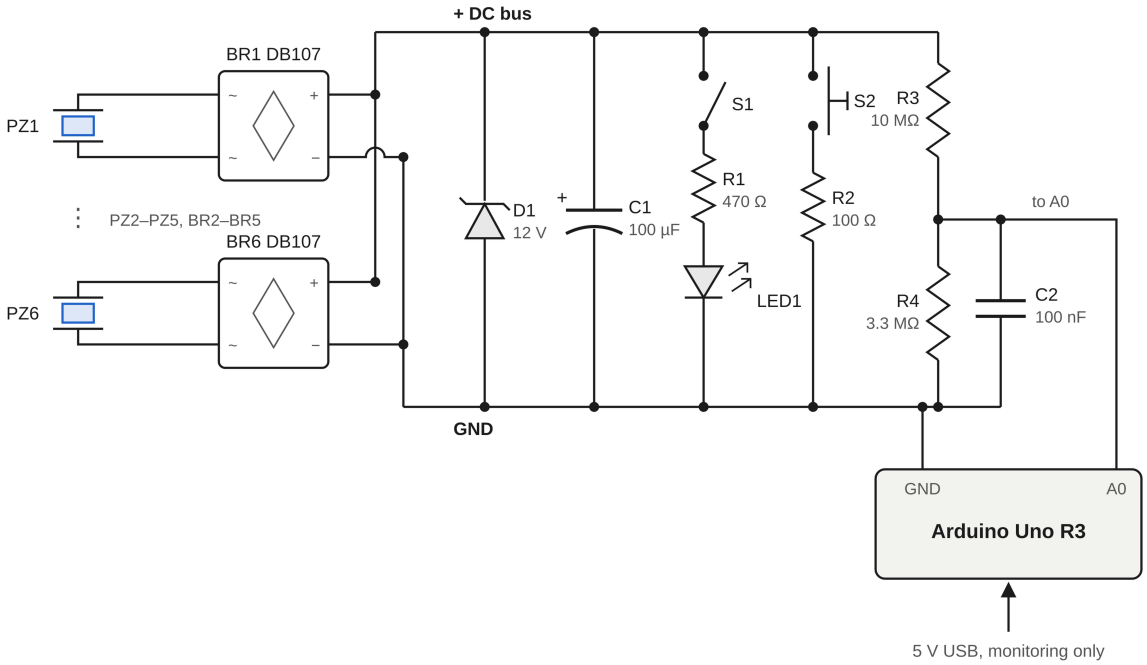

Figure 5. Circuit schematic. Two of the six identical disc–rectifier pairs are drawn.

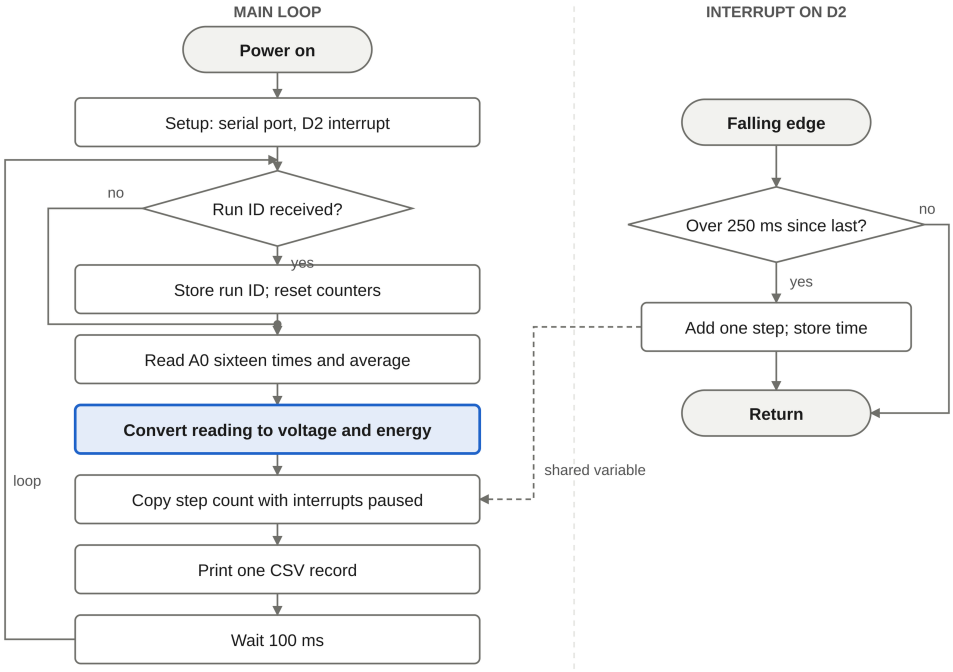

Figure 6. Firmware flowchart. The main loop writes one record every 100 ms, while an interrupt routine counts steps independently.

3.4. Prototype configurations

The tile is designed in three stages of increasing completeness (Figure 7). Prototype P1 is a single disc connected to one rectifier, a capacitor and an LED, and is used on the bench to confirm that the conversion chain works. Prototype P2 is the full six-disc tile with travel stops and individual rectifiers, and serves as the protected harvester. Prototype P3 adds the independently powered logger, a step-counting switch and an optional load cell; it is the version to be used for the validation tests.

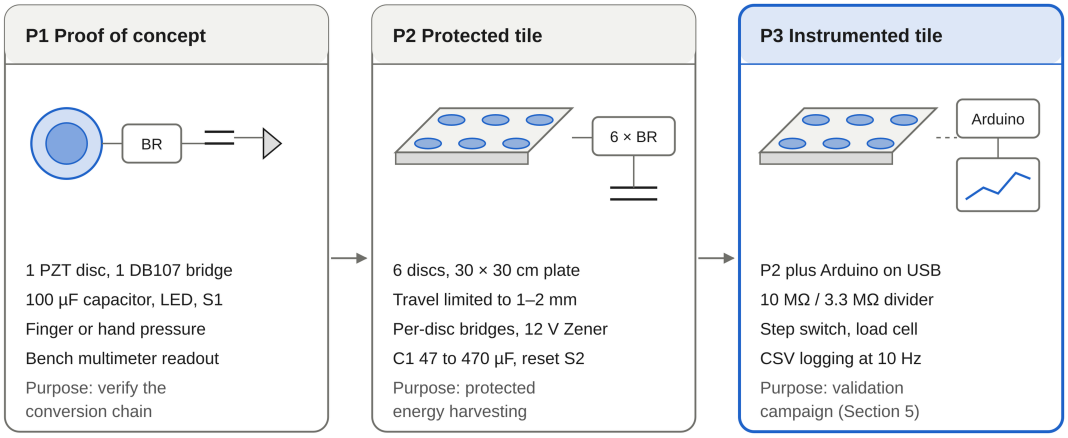

Figure 7. Prototype configurations. Each stage keeps the previous one and adds the elements listed.

4. Conceptual model of energy accumulation

To interpret the measurements and plan the tests, the tile is described by a simple charge-balance model. Each disc behaves like a small source of charge connected in parallel with its own internal capacitance. When the disc is pressed or released, its voltage rises; once that voltage is high enough to pass through the rectifier, charge flows into the storage capacitor. Every step therefore contains two charging events, one when the foot lands and one when it lifts.

Two features of this process shape the behaviour of the tile. First, the charge delivered by each step becomes smaller as the capacitor fills, because the disc must build up a higher voltage before the rectifier conducts. The capacitor voltage therefore rises quickly at first and then levels off at a *saturation voltage*, which is set by the voltage the discs can produce under load, less the small losses in the rectifier diodes. Second, the speed at which the capacitor approaches this level — the *charging rate* — depends on how the total disc capacitance compares with the storage capacitance: a small storage capacitor fills quickly, whereas a large one fills slowly but can hold more energy. Between steps, a little charge leaks away through the divider, the capacitor and the Zener diode.

The voltage produced by a disc grows with the force applied to it until the plate reaches the stops. Beyond that point the stops carry any extra load, so the disc voltage — and with it the saturation voltage — no longer increases. With the design values used here, this happens at a body weight of about 85 kg. The model also shows that the energy gained in a single step is largest when the capacitor is roughly half-way to its saturation voltage, and that a rectifier-and-capacitor circuit of this kind can never store more than one quarter of the electrical energy generated in a step, whatever the mechanical design [5].

In equation form, the peak footstep force and the open-circuit voltage swing of each disc are

$$F = k_h\, m\, g, \qquad V_m = V_{stop}\, \min(F, F_{stop}) / F_{stop} \tag{1}$$

where m is the body mass, $g = 9.81$ m s^{-2}, k_h is the heel-strike load factor, V_{stop} is the disc voltage at the stops and F_{stop} is the force at which the stops engage (Table 2). Because both the press and the release can push charge through the rectifiers, the capacitor voltage V_n after n steps follows

$$V_{n+1} = [V_n + k\,(V_{sat} - V_n)]\,[1 - T / (R_L\, C_s)], \qquad V_0 = 0 \tag{2}$$

with the saturation voltage and the charging rate

$$V_{sat} = V_m / 2 - 2V_D, \qquad k = 4N\, C_d / C_s \tag{3}$$

where N is the number of discs, C_d the disc capacitance, C_s the storage capacitance, V_D the diode voltage drop, T the interval between steps and R_L the leakage resistance. The stored energy is $E_n = C_s\, V_n^2 / 2$. Comparing the energy gained in one step with the electrical energy $N\, C_d\, V_m^2$ generated by the press and the release gives the per-step efficiency at capacitor voltage V

$$\eta = 2V\,(V_m - 2V - 4V_D) / V_m^2 \tag{4}$$

which is largest at $V = V_m / 4 - V_D$, where it equals $(1 - 4V_D / V_m)^2 / 4$; without diode losses this limit is 25 %.

The stored energy is calculated directly from the measured capacitor voltage and the known capacitance. Because energy grows with the square of voltage, any error in the voltage reading affects the energy roughly twice as strongly, which is why careful calibration of the voltage measurement matters (Section 7). The design values used for all predictions are listed in Table 2; those marked “assumed” are typical figures that will be replaced by bench measurements before the model is fitted to test data.

Table 2. Design values used in the model.

Parameter	Value	Source	Parameter	Value	Source
Number of discs	6	Design	Diode voltage drop	0.7 V	Assumed
Disc capacitance	20 nF	Assumed; LCR meter	Zener clamp voltage	12 V	Design
Disc voltage at the stops	30 V	Assumed; oscilloscope	Storage capacitance	100 µF	Design (47–470 µF tested)
Force at which stops engage	1000 N	Design	Leakage resistance	5.0 MΩ	Assumed; self-discharge test
Heel-strike load factor	1.2	Assumed; load cell	Interval between steps	1 s	Test protocol

5. Validation methodology

Before testing begins, the capacitance of each disc and of the storage capacitor is measured with an LCR meter, the Arduino's 5 V supply is measured with a digital multimeter, the leakage of the storage circuit is determined from a ten-minute self-discharge test, and the logger is checked against the multimeter at 2, 5, 8 and 11 V, with agreement within ±1 % required; the multimeter readings are then used to correct the logger's voltage conversion. The test plan (Table 3) varies body weight, number of steps, storage capacitance and the interval between steps, and every condition is repeated five times in random order. Each run is carried out on prototype P3 following the procedure in Figure 8.

Table 3. Factorial test plan (five randomised repeats of each condition).

Factor	Levels	Purpose
Body weight	40, 60, 80, 100 kg	Checks that output rises with weight and levels off above about 85 kg
Number of steps	10, 25, 50, 100, 200	Traces the full charging curve
Storage capacitance	47, 100, 220, 470 µF (at 60 kg)	Checks that charging slows as capacitance rises while the saturation voltage stays the same
Interval between steps	1 s; also 0.5, 2 and 5 s at 60 kg	Measures the effect of leakage between steps

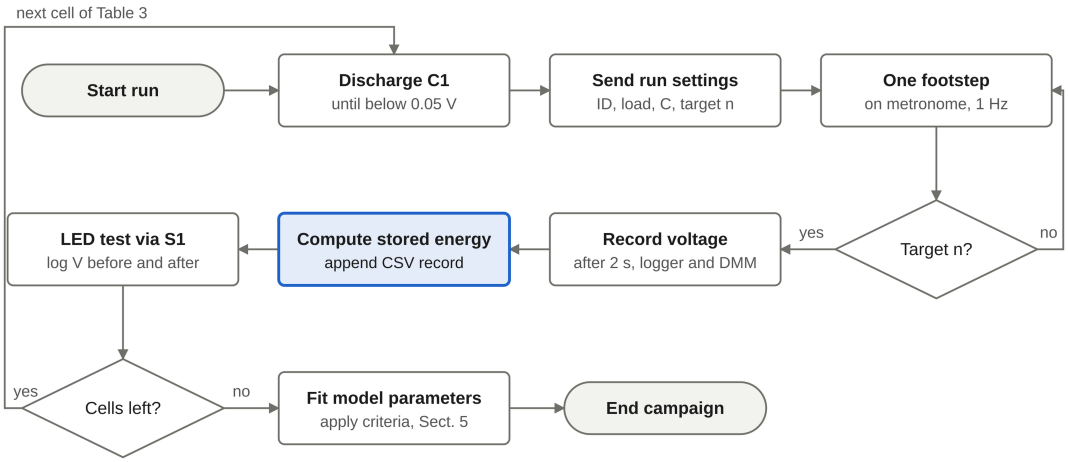

Figure 8. Test procedure for one run (inner loop: footsteps; outer loop: conditions of Table 3).

The saturation voltage and charging rate are then estimated for each load by fitting the model to the recorded charging curves, with leakage fixed at its calibrated value. The model is accepted only if four conditions are met: the charging rates for all loads agree within a pre-set equivalence margin (two one-sided tests at the 5 % significance level); the saturation voltage rises with load up to about 85 kg and then levels off; the charging rate falls in proportion to the increase in storage capacitance, within ±15 %; and predictions for repeat runs not used in the fitting fall within 10 % of the measured mean energy, with a coefficient of determination of at least 0.90.

6. Results

All results in this section are predictions of the model based on the values in Table 2; they will be compared with measurements from the test campaign described in Section 5. Stored energy builds up slowly over the first few

steps, accelerates as the voltage rises and then levels off (Figure 9). A 60 kg person is expected to store 0.51 mJ after 100 steps and 1.17 mJ after 200 steps on a 100 µF capacitor, which is consistent with the microjoule-per-step output reported for earlier piezoelectric tiles [9], [16].

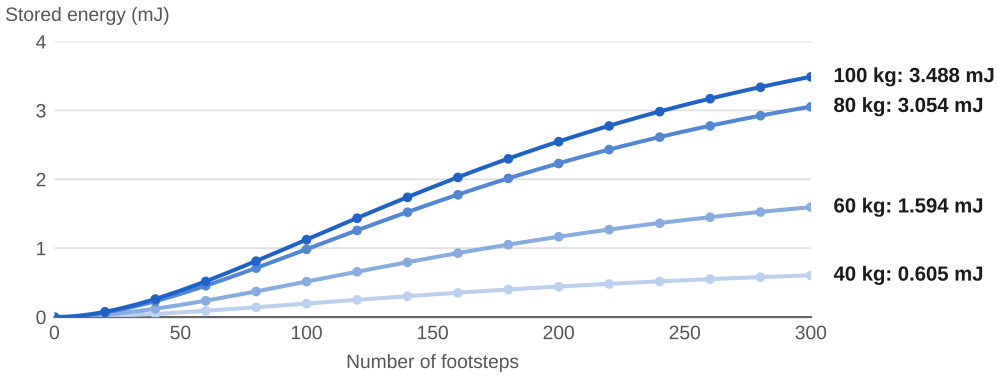

Figure 9. Predicted stored energy versus number of steps for four body weights (100 µF capacitor, one step per second).

Body weight has a strong effect up to the point at which the stops engage. Between 40 and 85 kg the energy stored after 100 steps increases almost six-fold; beyond 85 kg it stays constant because the additional load is carried by the frame rather than by the discs (Figure 10).



Figure 10. Predicted stored energy after 100 steps versus body weight. The dashed line marks the point at which the stops engage.

The most suitable storage capacitor depends on how long the tile is used (Figure 11). A 47 µF capacitor stores the most energy for runs of up to about 130 steps, a 100 µF capacitor is best between roughly 130 and 270 steps, and a 220 µF capacitor is preferable for longer runs within the 500 steps shown; for still longer runs the 470 µF capacitor eventually stores the most, because every capacitor approaches the same leakage-limited voltage. Small capacitors approach the saturation voltage after only a few steps and hold little energy at that voltage, while leakage between steps removes a larger share of their charge.

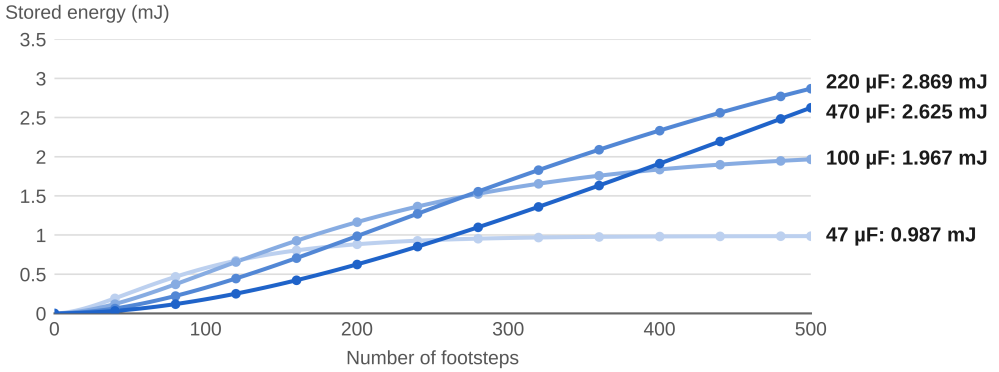

Figure 11. Predicted stored energy versus number of steps for four storage capacitors at 60 kg.

The efficiency of each step changes as the capacitor charges (Figure 12). For a 60 kg person it peaks at 18.8 % when the capacitor reaches about 4.6 V, and averages 9.5 % over a 100-step run that starts from an empty capacitor.

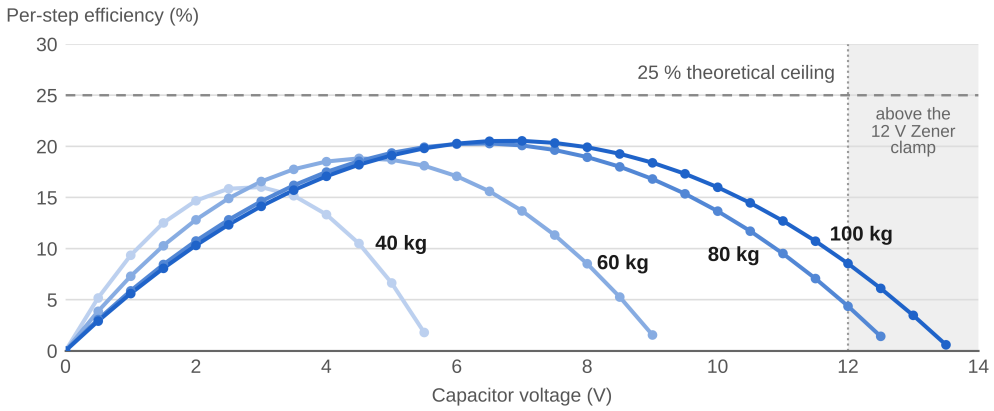

Figure 12. Predicted per-step conversion efficiency versus capacitor voltage. The dashed line marks the 25 % theoretical limit of a rectifier-and-capacitor circuit. The shaded band marks voltages above the 12 V Zener clamp, which the circuit cannot reach.

Table 4. Predicted capacitor voltage and stored energy after 100 steps (100 µF).

Body weight (kg)	Predicted voltage (V)	Predicted energy (mJ)
40	1.97	0.195
60	3.20	0.514
80	4.44	0.984
100	4.74	1.124

7. Discussion

Changing each design value by 20 % in turn shows which factors matter most (Figure 13). The output is governed mainly by how much voltage the discs produce for a given force — which depends on the discs themselves and on the force at which the stops engage — and by the disc capacitance. In contrast, the rectifier losses matter much less: lowering the diode voltage drop by 20 % raises the stored energy by only about 6 %. Leakage has little effect at its expected level, but if reverse current through the Zener diode lowered the leakage resistance to 1.5 MΩ, the energy stored after 100 steps would fall by about one third. This risk is real, because the 1N4742A datasheet allows a reverse current of up to 5 µA at 9.1 V, equivalent to about 1.8 MΩ [18]. Measuring leakage before testing is therefore essential.

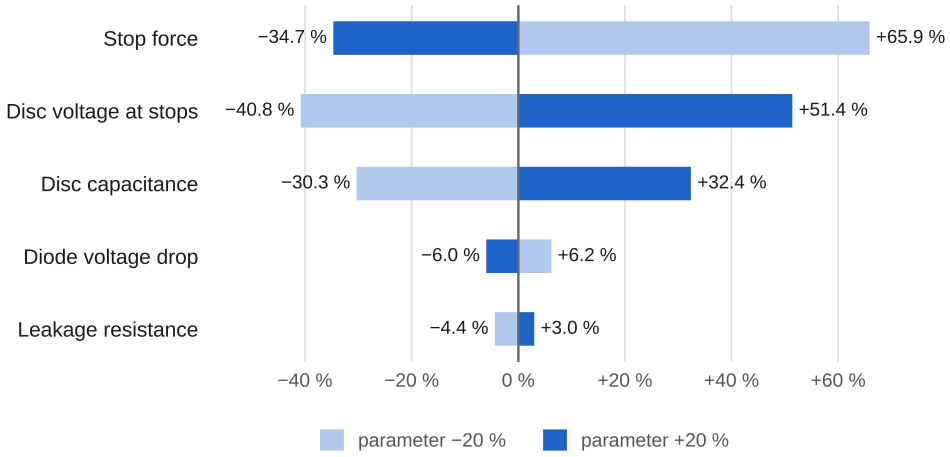

Figure 13. Change in predicted energy after 100 steps (60 kg, 100 µF) when each design value is lowered or raised by 20 %.

The reliability of the measurements was assessed with a Monte Carlo simulation of 100,000 trials at a capacitor voltage of 5 V, in which each component tolerance varied randomly within its specified range (Table 5). The

tolerance of the storage capacitor and the variability of the USB supply, which serves as the Arduino's voltage reference, account for almost all of the uncertainty. Measuring these two quantities before testing narrows the 95 % uncertainty interval from about −20/+29 % to ±1.9 %, which is small enough to detect the predicted 14 % difference between 80 and 100 kg.

Table 5. Uncertainty budget for the measured energy (standard contributions).

Source	Tolerance (before → after calibration)	Before calibration	After calibration
Storage capacitance	±20 % → ±1 %	11.5 %	0.6 %
Voltage reference (USB supply)	±5 % → ±0.5 %	5.8 %	0.6 %
Divider resistors	±1 % each	1.2 %	Removed by multimeter check
Analogue-to-digital resolution	±1 step	0.5 %	0.5 %
Combined (Monte Carlo)		**13.4 %**	**1.0 %**

With an expected average of about 5 µJ stored per step, StepVolt produces five to six orders of magnitude less energy than commercial electromagnetic tiles [6], [13], which rely on much larger plate movements. The tile is therefore best suited to teaching and measurement rather than to supplying power. Within this role, the most effective improvements would be a stiffer top plate or additional discs, both of which increase the voltage generated by each step.

Limitations. The present study has four main limitations. First, all performance figures are model predictions and have not yet been confirmed by measurement. Second, several design values in Table 2 are typical figures rather than measured properties of the discs and capacitor used. Third, the planned tests use controlled stepping by one person at a time and therefore do not represent the irregular loading of natural pedestrian traffic. Finally, the safe deflection and long-term durability of the discs, spacers and stops under repeated loading have not been examined.

8. Conclusions

This study presents StepVolt as a measurable energy-harvesting system rather than a simple voltage demonstration. A floor tile with six protected PZT discs, individual rectification and independent monitoring was designed in three prototype stages. A charge-balance model predicts that a 60 kg person would store about 0.5 mJ in 100 steps, that a single step converts at most 18.8 % of the available electrical energy when the capacitor is about half charged, and that output stops increasing above about 85 kg once the stops engage. The voltage produced by the discs for a given force is the factor that most limits performance, and two inexpensive calibration steps reduce the measurement uncertainty from 13.4 % to 1.0 % (one standard deviation). These findings are predictions that will be confirmed or revised through the planned test campaign. Future work will examine the long-term durability of the discs and spacers, natural walking patterns and more advanced interface circuits that remain compatible with independent monitoring.

Declarations

Conflict of interest. The authors declare that they have no known competing financial interests or personal relationships that could have appeared to influence the work reported in this paper.

Funding. This research received no external funding.

Data availability. The model code, design values and simulation outputs used to generate the figures will be made available by the corresponding author on reasonable request. Measured data from the planned test campaign will be shared in the same way once collected.

Use of generative AI. During the preparation of this work the authors used an AI-assisted tool for language editing and figure preparation. After using this tool, the authors reviewed and edited the content as needed and take full responsibility for the content of the publication.

Ethics approval and consent. Not applicable: this study reports no data from human participants.

Author contributions. Ramesh Palanisamy, Alreem Said Almasroori, Al Jaziy Faiz Al-Rashdi, Sheikha Khamis Al-Senaidi, Aljalila Raised Alabd Almalkia, Aryam Nasser Said Aljabri and Inas Ali Said Alawisi contributed to this work. All authors read and approved the final manuscript.

References

[1] M. A. Abd Manaf, B. C. Kok, "Green floor tiles energy harvesting using piezoelectric disc," *Evol. Electr. Electron. Eng.*, vol. 3, no. 1, pp. 409–415, 2022.

[2] M. Z. Azmi, S. F. Syed Adnan, "Energy generating from footsteps on piezoelectric module," in *Proc. IEEE Ind. Electron. Appl. Conf. (IEACon)*, 2024, doi: 10.1109/IEACon61321.2024.10797263.

[3] F. Cascetta, A. Lo Schiavo, A. Minardo, M. Musto, G. Rotondo, A. Calcagni, "Analysis of the energy extracted by a harvester based on a piezoelectric tile," *Curr. Appl. Phys.*, vol. 18, no. 8, pp. 905–911, 2018, doi: 10.1016/j.cap.2018.04.015.

[4] K. A. Chandra, S. Narayan, K. A. Mamun, A. A. Chand, D. Prasad, M. R. Ahmed, "A review of footstep energy harvesting systems," *IEEE Access*, vol. 13, pp. 87149–87174, 2025, doi: 10.1109/ACCESS.2025.3570963.

[5] N. Chen, J. Liu, T. Wei, "Review of energy management circuits for piezoelectric vibration energy harvesters," *Chin. J. Theor. Appl. Mech.*, vol. 53, no. 11, pp. 2928–2940, 2021, doi: 10.6052/0459-1879-21-440.

[6] Emirates News Agency (WAM), "Pavegen showcases energy-generating flooring at World Future Energy Summit," Jan. 14, 2026.

[7] R. Faltus, M. Jáně, T. Zedníček, "Storage capacitor properties and their effect on energy harvester performance," KYOCERA AVX Components Corp., tech. paper, n.d.

[8] J. C. T. Go, A. K. A. Remolino, J. M. P. Sanchez, K. E. Paz, "Harvesting energy through piezoelectric tiles: A comparative study of wood, porcelain, and ceramic tiles," *EDUCATUM J. Sci. Math. Technol.*, vol. 10, no. 1, pp. 1–6, 2023, doi: 10.37134/ejsmt.vol10.1.1.2023.

[9] S. J. Hwang *et al.*, "Designing and manufacturing a piezoelectric tile for harvesting energy from footsteps," *Curr. Appl. Phys.*, vol. 15, no. 6, pp. 669–674, 2015, doi: 10.1016/j.cap.2015.02.009.

[10] D. Isarakorn, S. Jayasvasti, P. Panthongsy, P. Janphuang, K. Hamamoto, "Design and evaluation of double-stage energy harvesting floor tile," *Sustainability*, vol. 11, no. 20, Art. no. 5582, 2019, doi: 10.3390/su11205582.

[11] H. S. Kim, J.-H. Kim, J. Kim, "A review of piezoelectric energy harvesting based on vibration," *Int. J. Precis. Eng. Manuf.*, vol. 12, no. 6, pp. 1129–1141, 2011, doi: 10.1007/s12541-011-0151-3.

[12] P. Panthongsy, D. Isarakorn, K. Hamamoto, P. Janphuang, "Performance and behavior analysis of piezoelectric energy harvesting floor tiles," in *Proc. 5th Int. Conf. Eng. Appl. Sci. Technol. (ICEAST)*, 2019, pp. 1–4, doi: 10.1109/ICEAST.2019.8802555.

[13] Pavegen, "FAQs," [Online]. Available: https://www.pavegen.com/faq (accessed Nov. 8, 2026).

[14] T. H. Pham, T. D. Bui, T. T. Dao, "A high-reliability piezoelectric tile transducer for converting bridge vibration to electrical energy for smart transportation," *Micromachines*, vol. 14, no. 5, Art. no. 1058, 2023, doi: 10.3390/mi14051058.

[15] I. Z. Saifudin, M. I. A Bakar, "Development of floor tile power generating light up LED," *J. Eng. Technol. (UniKL BMI)*, vol. 11, no. 1, pp. 1–8, 2023.

[16] N. Thanach-Issarasak, S. Jayasvasti, P. Yingyong, D. Isarakorn, "Potential of piezoelectric floor tile for harvesting energy from human footsteps," in *Proc. Int. Conf. Power, Energy Innov. (ICPEI)*, 2021, pp. 119–121, doi: 10.1109/ICPEI52436.2021.9690688.

[17] P. Visconti, L. Bagordo, R. Velázquez, D. Cafagna, R. De Fazio, "Available technologies and commercial devices to harvest energy by human trampling in smart flooring systems: A review," *Energies*, vol. 15, no. 2, p. 432, 2022, doi: 10.3390/en15020432.

[18] Vishay Semiconductors, "1N4728A to 1N4764A Zener diodes," datasheet, Doc. no. 85816, Rev. 2.5, Mar. 2019.

[19] P. Yingyong, P. Thainiramit, S. Jayasvasti, N. Thanach-Issarasak, D. Isarakorn, "Evaluation of harvesting energy from pedestrians using piezoelectric floor tile energy harvester," *Sens. Actuators A Phys.*, vol. 331, Art. no. 113035, 2021, doi: 10.1016/j.sna.2021.113035.